MAC FAUCETS Paramount, CA. 866.558.3200 310.919.3073 www.macfaucets.com

Installation Drawings

FA610-68

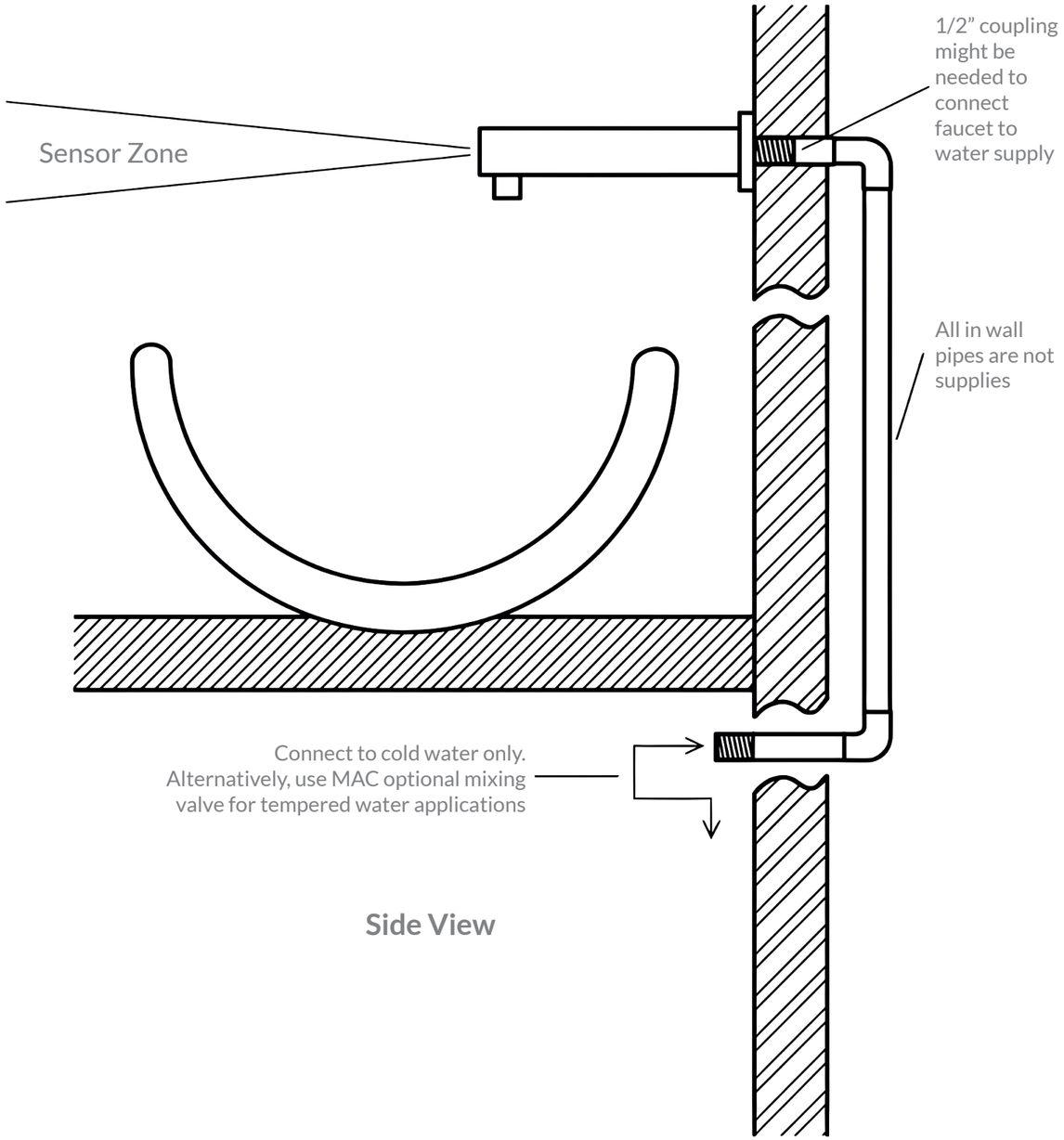

Side View

MAC FAUCETS Paramount, CA. 866.558.3200 310.919.3073 www.macfaucets.com

MAC FAUCETS

When Style Matters

DESIGNED & ASSEMBLED IN THE USA

User Manual

FA610-68

Installation Procedure:

Before proceeding please take a moment to view drawings. At least one 1" to 1-1/4" hole should be present in wall with water pipe already connected as shown in drawings. Also make sure that 1/2" street elbow is present behind wall and in-line with hole cut for faucet spout.

Before Proceeding, connect hose to street elbow and turn angle stop until fully open. Run water at full pressure for a period of 3 minutes to get rid of any debris that might be present in water system

01 Place plumber's putty or Teflon tape over the 1/2" threads located at the rear end of spout tube.

02 Place the threaded end of spout tube in the hole that is cut into the wall specifically for spout (top hole). At this time the spout tube should be aligned with female end of street elbow that is located inside the wall.

03 Fasten spout to female end of street elbow by turning spout clockwise. As you do so, make sure that spout tube is straight with street elbow so that the connection is not cross threaded. DO NOT use any tools such as pliers or channel locks to fasten spout as this will cause damage to spout and/or spout finish. When done fastening spout to wall, make sure that the aerator is facing downwards.

04 Place bedding compound in and around the area where the spout tube enters the wall to minimize water leak in wall.

05 Slide escutcheon (disk shaped brass flashing) over spout tube and press firmly against wall. Adhesive quality caulking may be used to keep escutcheon pressed against wall. Remove any access bedding compound and/or adhesive caulking that may be visible.

Please remember, this faucet has a body sensor and not hands sensor. The faucet will start operating as soon as user is in front of spout. The faucet will continue to operate until user moves away.

Battery replacement:

1. Unscrew round plastic sensor (Black plastic) located in the front end of faucet by turning sensor counter clockwise.
2. Make sure that sensor is out of the way, and not touching water (it is not necessary to unplug senor cable).
3. Pull battery housing by pulling gently on the battery wire.
4. Unscrew battery housing and replace all 4 batteries with Duracell copper top batteries.
5. Place battery housing back and reinstall sensor.

Limited Warranty

Mac Faucets warrant this faucet to be free of defects for a period of one year from date of purchase. Mac Faucets will replace, free of charge, during this warranty period, parts that prove defective when properly installed and under normal use and service. Damage that occurs as a result of abuse, improper installation, environmental conditions, or improper application will void this warranty. Products must be shipped with postage and handling prepaid, along with dated proof of purchase. This warranty does not cover installation or any other labor charges. it does not cover shipping and handling of both replacement parts and returned defective parts. Products or components that have been altered or in any way modified will not be covered under this warranty. Replacement parts are under warranty only for the remaining period under the initial warranty. Some states do not allow for exclusion of incidental or consequential damage.

User Manual
FA610-68

MAC FAUCETS © Paramount, CA. 866.558.3200 310.919.3073 www.macfaucets.com

Rough-in for FA610-68 wall mount faucet

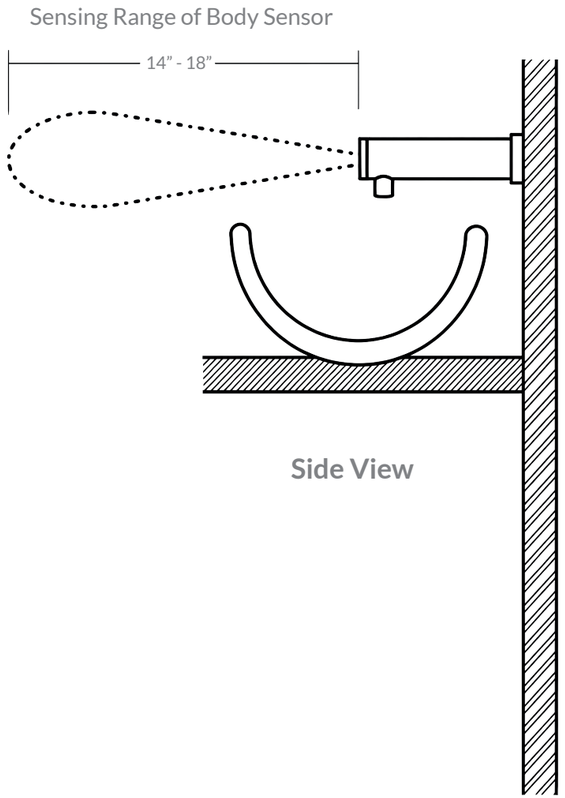

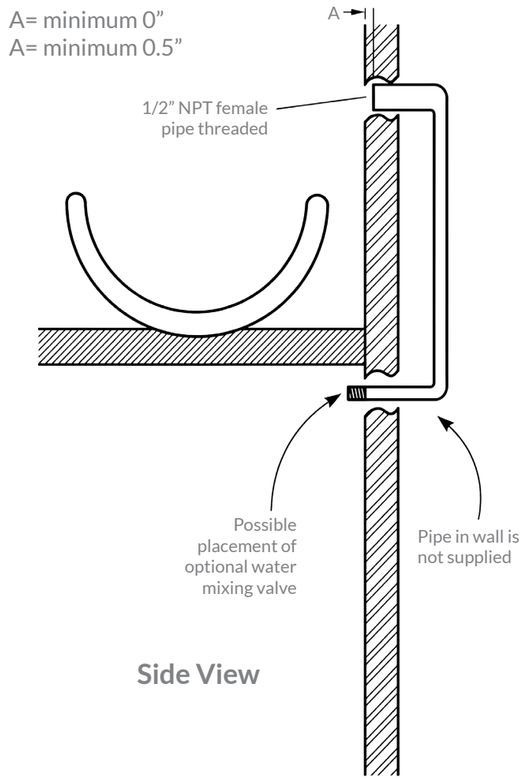

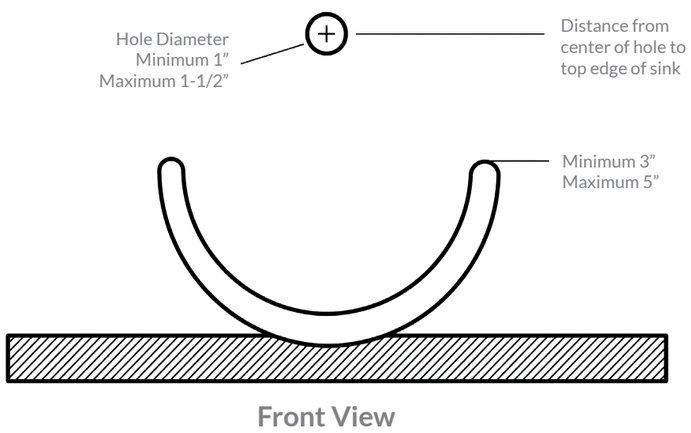

Approximate dimensions

